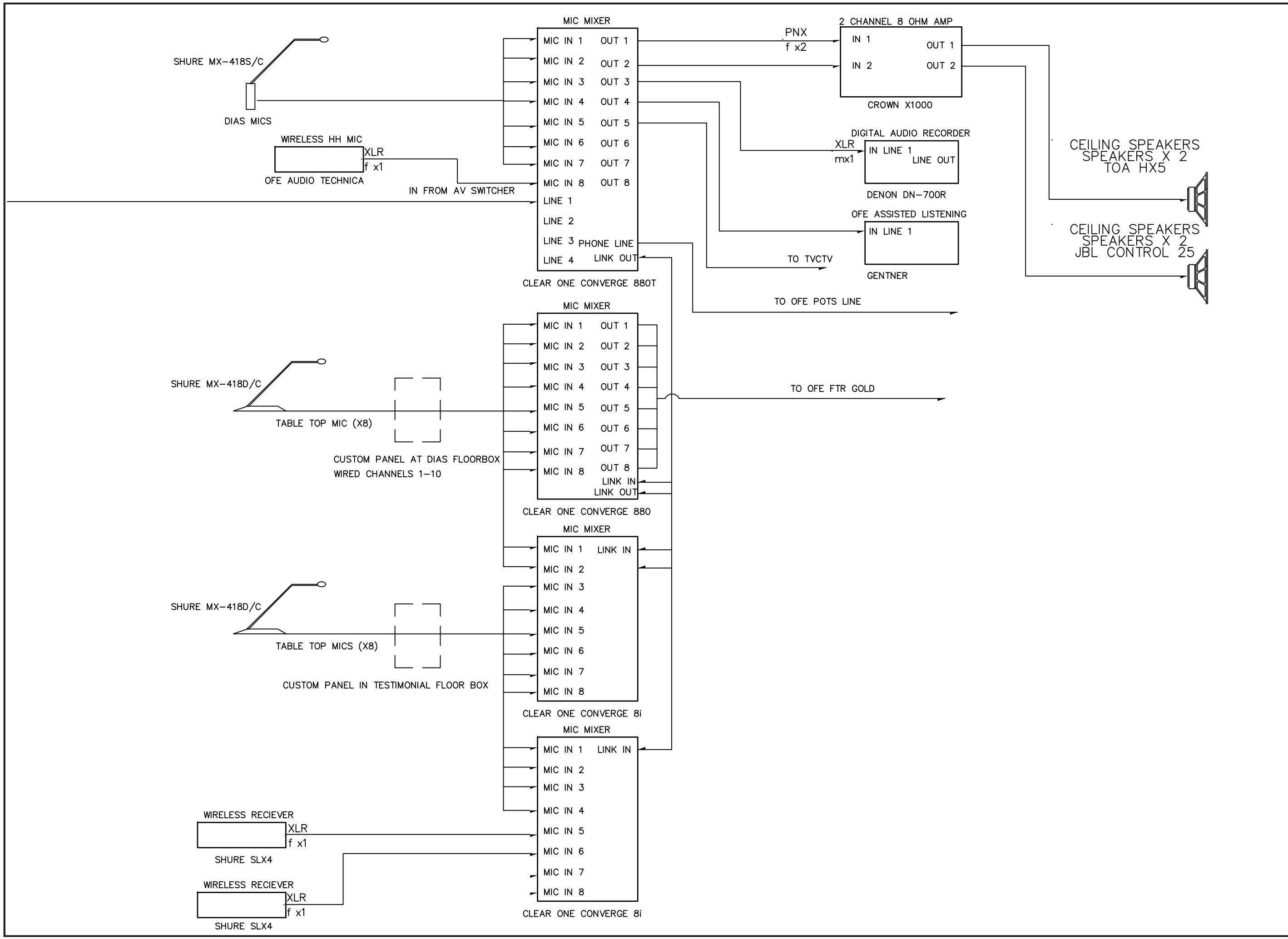

CITY OF WEST LINN
22500 SALAMO RD.
WEST LINN OR, 97068

REVISIONS
1.
2.
3.
4.

MAIN AV WIRING

DRAWN BY:

SCALE NONE

A/V SYSTEMS DESIGN

COUNCIL CHAMBERS AUDIO

AV 2